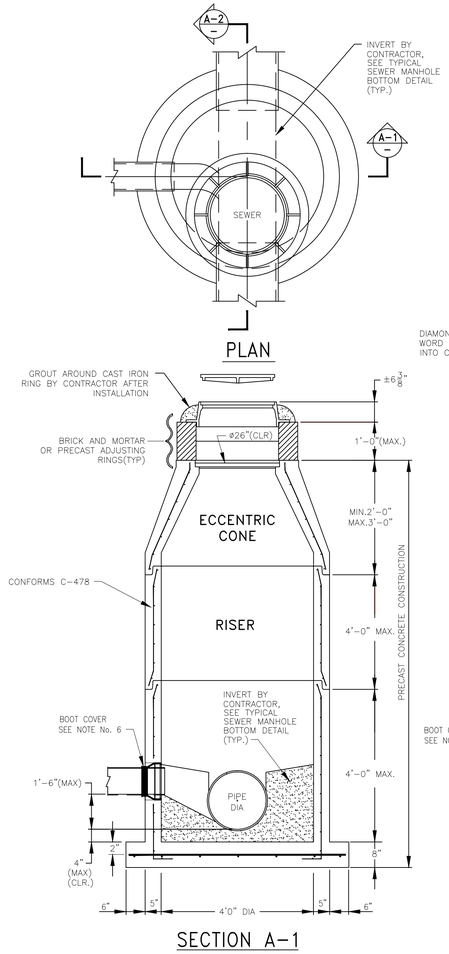

JOINT DETAIL

STANDARD MANHOLE DETAIL (A)

NOT TO SCALE

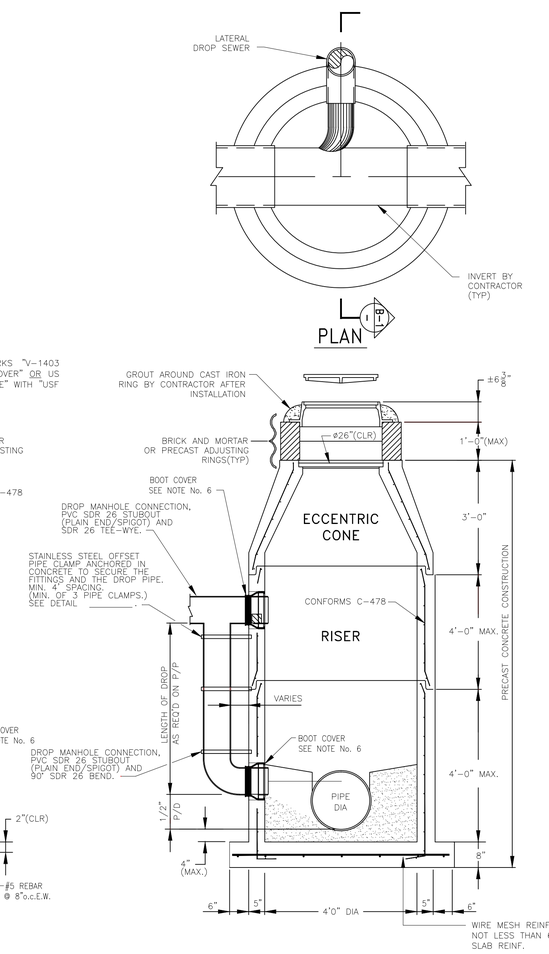

STANDARD DROP MANHOLE DETAIL (B)

NOT TO SCALE

NOTES:

1. REINFORCING STEEL TO MEET ASTM A-615 GRADE 60, CONCRETE TO BE 4000 PSI IN 28 DAYS.
2. CONCRETE TO CONTAIN ZYPEX ADMIX AS PER MANUFACTURE RECOMMENDATIONS.
3. REINFORCING TO MEET AASHTO HS-20 LOADING.
4. JOINTS BETWEEN PRECAST UNITS WILL BE SEALED WITH A RUBBER GASKET TO MEET ASTM C-443.
5. PRECAST CONCRETE STRUCTURE TO MEET ASTM C-478.
6. USE RESILIENT BOOT CONNECTORS TO CONNECT PIPES TO MANHOLES. RESILIENT BOOT CONNECTORS AND THEIR INSTALLATIONS SHALL MEET AND/OR EXCEED ALL REQUIREMENTS OF ASTM C923, ASTM C1244, AND ASTM C1478.
7. MANHOLES THAT EXCEED 12' IN DEPTH SHALL USE 10" THICK CONC. BOTTOM SLAB.
8. XYPEX ADMIX C-1000 SHALL BE INCORPORATED INTO ALL MORTAR MIXES USED IN SANITARY SEWER MANHOLES.
9. ALL XYPEX ADMIX SHALL INCLUDE A DYE SO IT CAN BE DISTINGUISHED FROM CONCRETE WITHOUT XYPEX EXCEPT TOP SLAB OF LIFT STATION WET WELS AND VALVE PITS WHICH SHOULD NOT HAVE ANY DYE IN THE XYPEX.
10. CONCRETE "FORTIFIED WITH CONSHIELD" (IN ADDITION TO XYPEX), IS REQUIRED FOR LIFT STATION WET WELLS, MANHOLES WITHIN CLOSE PROXIMITY (100 FEET) OF LIFT STATIONS, DEEP (8 FEET AND DEEPER) MANHOLES, AND ANY MANHOLE WHICH IS OR WILL BE RECEIVING A FORCE MAIN.

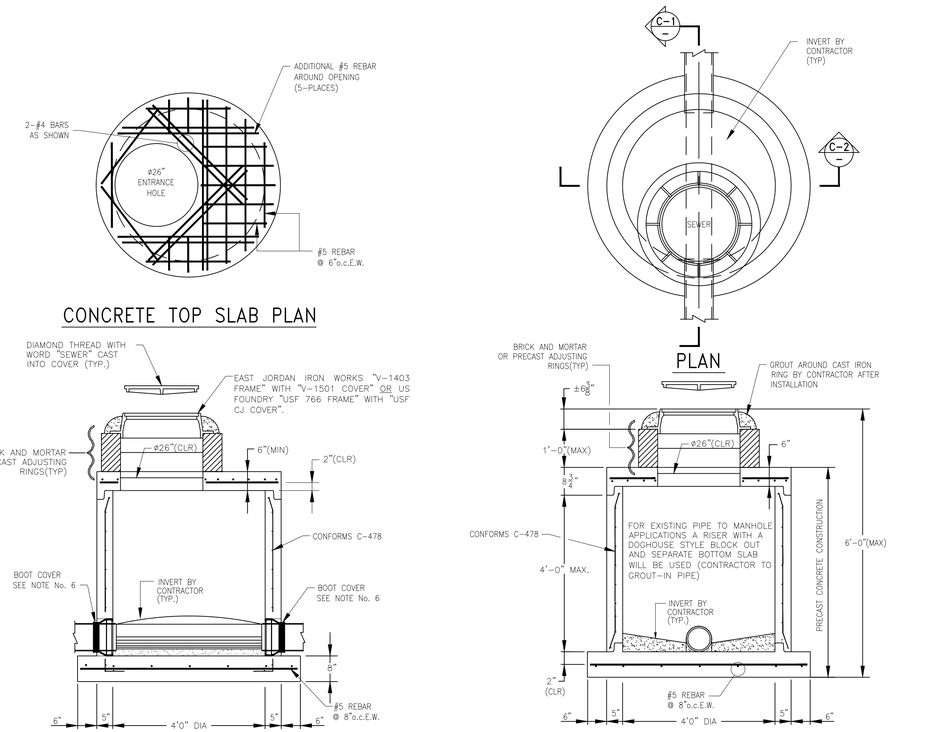

STANDARD SHALLOW MANHOLE DETAIL (C)

NOT TO SCALE

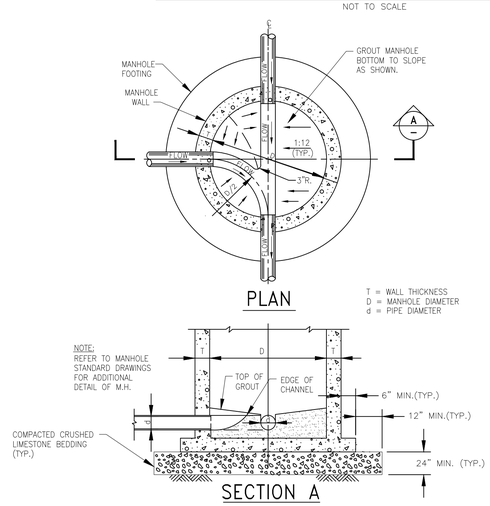

TYPICAL SEWER MANHOLE BOTTOM DETAIL

NOT TO SCALE

48" DIAMETER PRECAST CONCRETE SEWER MANHOLE

JEFFERSON PARISH DEPARTMENT OF ENGINEERING

DRAWING TITLE: SEWER STANDARD DETAILS

DRAWN BY: J.C.	DATE: 03/23/15	CHECKED BY: R.M.	DATE: 03/23/15
REVISED BY: J.W.	DATE: 12/8/15	REVISED BY: –	DATE: –
REVISED BY: –	DATE: –	REVISED BY: –	DATE: –
REVISED BY: –	DATE: –	REVISED BY: –	DATE: –
XGDS: AUTOCAD LT. 2012		WIN: SEWER2.DWG	
FILE NUMBER: 003			

SHEET NO. 2 OF 2